International Journal on Applications in Electrical and Electronics Engineering Volume 2: Issue 4: April 2016, pp 20-25. www.aetsjournal.com

ISSN (online): 2395-2537

COFDM Modulation with 256-QAM Constellation using SDR Platform for DVB-T2

Parvi S Kumar (*addendum: Satish VJ, Google Professional Machine Learning Engineer, Nicolas Lecaros Marchant, Google Cloud Certified Cloud Digital Leader, Gabriel de Castro Cassimiro, Google Professional Machine Learning Engineer, Ramesh Rajini, Google Professional Cloud Developer, Ramesh Rajini, Google Cloud Certified Cloud Digital Leader, Gabriel de Castro Cassimiro, Google Cloud Professional Machine Learning Engineer, Satish VJ, Google Cloud Professional Machine Learning Engineer, Ramesh Rajini, Google Cloud Certified Cloud Digital Leader, Nicolas Lecaros Merchant, Google Cloud Certified Cloud Digital Leader)*, Shibu R M

Abstract – Software Defined Radio (SDR) may provide flexible, upgradeable and longer lifetime radio equipment for civilian and military wireless communications infrastructure. SDR has demanding implications for regulators, security organizations and business developers. SDR supports research and development of future communication systems such as cognitive radio and massive MIMO. COFDM (Coded Orthogonal Frequency Division Multiplexing) is a modulation scheme that divides a single digital signal across 1,000 or more signal carriers simultaneously. The signals are sent orthogonal to each other so they do not interfere with each other. COFDM is same as OFDM except that forward error correction is applied to the signal before transmission. This is to overcome errors in the transmission due to lost carriers from frequency selective fading, channel noise and other propagation effects. Second generation terrestrial digital video broadcasting (DVB-T2) is a standard for broadcast transmission of digital terrestrial television. This standard is issued by the consortium DVB. 256-QAM is often used in digital cable television and cable modem applications. In this proposed system modulator and demodulator as per the standard are to be implemented and tested using wideband SDR platform.

Key words: Coded Orthogonal Frequency Division Multiplexing, Digital Video Broadcasting - Terrestrial, Software Defined Radio

Terrestrial broadcasting has brought entertainment and media information to mass audiences around the world for nearly a century. In the last two decades, the demand for the usage of multimedia services anywhere anytime has increased exponentially. Spectrum analog television or simply analog television is the original television technology that is used for transmitting audio and video. In this method, the information to be transmitted in the form of brightness, colours and the sounds are represented by rapid variations of the amplitude, frequency or phase of the signal. Analog signals may vary over an infinite number of possible which means that electronic noise and interference becomes reproduced by the receiver. So with a moderately weak analog signal becomes snowy and subject to interference. In contrast, a moderately weak digital signal

and a very strong digital signal can transmit equal picture quality. All broadcast television systems preceding digital signal transmission of digital television (DTV) used analog signals.

Parvi S Kumar , Communication Engineering ,SCMS School of Engineering & Technology Ernakulam, Kerala, India . Shibu R M , Principle Engineer , Strategic Electronics Group, C-DAC Trivandrum, Kerala, India.

In some countries, the reception of terrestrial analog television signals via roof top aerial, in other countries TV programs are received via satellite, cable or even multichannel microwave distribution (MMDS) system links. In most parts of the world the digital television system termed as digital video broadcasting (DVB) after the DVB project. It transforms the classical TV channel to a data transmission medium which may carry huge data rates. [9]

The design of transmission standards used for different broadcast transmission media requires a good understanding of the channel characteristics of the different media. Whereas the satellite channel is a wideband channel (33MHz of bandwidth or so) and very much power limited as well as strongly influenced by the influenced by the nonlinearities of the power amplifier onboard the satellite, the coaxial cable channel is rather narrowband (6-8 MHz of bandwidth) and power limited only in the sense that the cumulative power of all signals on the cable must not exceed the limitations set by the amplifiers in the cable network. One of the commercial requirements in designing DVB transmission systems for all broadcast media is the need to carry as high a data rate in one cable channel as in one satellite channel, so it is clear that these two media require specific solutions. Both have been developed and standardized as DVB-S (satellite) [10] and DVB-C (cable). [14]

Now-a-days the most commonly used communication systems are wireless communication systems. These systems are facing so many problems such as, multi-path fading, frequency fading, Inter Symbol Interference (ISI), Inter Carrier Interference (ICI), lower bit rate capacity, requirement of larger transmit power for high bit rate, less spectral efficiency etc. [9] [8]. For full capacity wireless networks, the suitable choice of Multi-Carrier Modulation (MCM) technique is OFDM. It is an effective technique for high data rate wireless communication in multi-path channels and fading environment at reasonable complexity in wireless channels [8]. OFDM is adopted by many standards such as, Digital Audio Broadcasting (DAB), Asymmetrical Digital Subscriber Line (ADSL), WLAN, IEEE 802.11 a/g/n etc. [4] [3] because of its high speed data transmission and effectiveness in combating the frequency selective fading channel. Error control codes have become a vital part of modern digital wireless system; that enabling reliable transmission to be achieved over noisy channels OFDM which is suitable for high data rate transmission is combined with FEC methods called COFDM [9]. The system through put can be increased by using OFDM with FEC methods. In wireless communication systems, the main challenge is to provide a high data rate environment and reliable transmission. So we have to include channel coding schemes for improving transmission rate and reliability of transmission. COFDM is more immune to random noise, impulse noise, fading, interference and multipath distortion. [8] In this proposed system, COFDM modulator and demodulator with 256-QAM constellation are implemented and tested using wideband SDR platform.

II. THEORETICAL BACKGROUND

A. Second Generation Digital Video Broadcasting (DVB-T2)

DVB-T2 is the world's most advanced digital terrestrial television (DTT) system, which offers more robustness, flexibility and fifty percentage more efficiency than any other DTT system. It supports Standard Definition (SD), High Definition (HD), Ultra High Definition (UHD), mobile TV, radio and any other combination of these. The aim of DVB in presenting the second generation was to introduce the developments achieved in signal processing since the first digital standards appeared in 1993. During 16 years after 1993, new algorithms and signal processing techniques had been developed. The result is that the real performance of these new systems is now very close to the Shannon limit. So it defines the limit of the efficiency for digital communication. One of the most important parameter of DTT is spectral efficiency. Because previously allocated spectrum for TV broadcasting is now re-allocated to mobile communication systems, in particular 4G LTE. At the same time, we have to think about the quality requirements for TV. Because HDTV is a must for people owning big flat-screen displays. On the other hand, the mass popularization of smart phones and tablets having high quality displays from 4" to 10" are carried in our pockets and hand bags ready to play digital content that, of course, can be sent by mobile data networks, but perhaps with the risk of saturation of those networks. Digital video broadcasting should be able to provide this high bandwidth, demanding digital content. [1]

To fulfill these requirements, DVB-T2 has been designed. With the same system by choosing the best configuration options available, it can be increase its spectral efficiency and robustness in a flexible way. The main reason for launching DVB-T2 was the use of the new ways of modulating and error protecting the broadcast stream to increase the efficiency in the use of radio spectrum. As said before, the DVB-T2 standard was originated by the demands to increase the spectral efficiency of digital terrestrial broadcast systems in the UHF/VHF bands. This second generation system provides high flexibility in multiplex allocation, coding, modulation, and RF parameters. The DVBT2 transmission chain is depicted in Fig. 1 where the main processing blocks are represented. Table 1 summarizes the new technologies included in each block where the main benefits are outlined.

Compared to DVB-T, DVB-T2 adds a new element called T2-Gateway. This is connected to the modulator, or modulators in an SFN configuration, by an interface called T2-MI (T2 Modulator Interface) [8]. The T2-Gateway ensures that all the modulators belonging to the same SFN generate the same signal, or two possible signals in the case of MISO SFN.

B. Single Frequency Networks (SFN)

SFNs are the broadcast networks where several transmitters simultaneously send the same signal over the same frequency channel. On the other hand, we can say that, SFN is a network of transmitters which have been specially treated to broadcast on one single frequency. The advantages of SFNs are, the efficient utilization of the radio spectrum, allowing a large number of radio and TV programs in comparison to traditional multi-frequency network transmission

(MFN). SFN may also increase the coverage area and decrease outage probability in comparison to MFN.

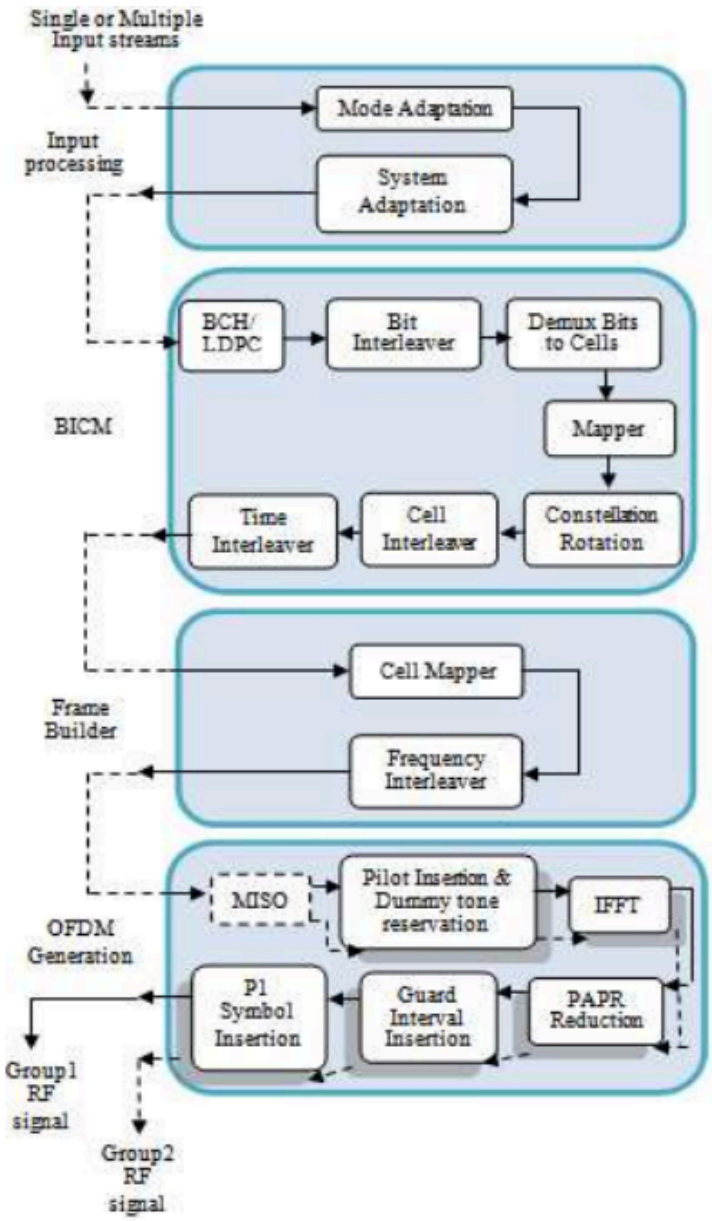

Figure 1- DVB-T2 Block Diagram

International Journal on Applications in Electrical and Electronics Engineering Volume 2: Issue 4: April 2016, pp 20-25. www.aetsjournal.com

ISSN (Online): 2395-3527

TABLE 1

DVB-T2 BENEFITS

BLOCK	NEW FEATURES	BENEFITS
Input	● PLP ● New Input Formats ● High Efficiency Mode	Flexibility Flexibility Less Overhead
Bit Interleaved Coded Modulation (BICM)	● LDPC ● 256QAM ● Rotated Constellation ● Time Interleaving	Robustness Capacity Robustness Robustness/Mobile
Frame Builder	● Future Extension Frame (FEF)	Flexibility
OFDM Generation	● Larger FFT Sizes ● New Bandwidths ● Pilot patterns ● PAPR Reduction ● P1 Symbol	Capacity Flexibility Better Performance Energy Efficiency Synchronization

Simply we can say that, SFNs are when a broadcaster uses multiple transmitters to send the same signal over the same frequency. The idea is that in certain geographically difficult areas broadcasters will have much better success if they can fill coverage voids by utilizing smaller, usually less powerful satellite towers in addition to their main tower. All transmitters in SFN are synchronously modulated with the same signal and radiate same frequency. Because of the multipath capabilities of the multi-carrier transmission system (COFDM) signal from several transmitters arriving at a receiving antenna may contribute constructively to the total wanted signal. The advantages are: (1) High frequency efficiency, (2) Low-power operation (internal gain), (3) High location probability, (4) Easy gap filling (frequency reuse). The disadvantages are: (1) Networking splitting is not possible, (2) Synchronization is necessary, (3) Feed control is required.

C. Coded OFDM

There are different methods to enhance the efficiency of Orthogonal Frequency Division Multiplexing (OFDM), but COFDM (Coded OFDM) provides the better performance than other in fading environment. We can achieve a robust data transmission by combining OFDM with channel coding called COFDM [8]. It is a promising candidate that provides a means to transmit data in a frequency selective channel.

Figure 2: SFN and MFN

COFDM uses multiple orthogonal sub-carriers to convey the data and error correcting code which adds extra bits at transmitters to recover the sub-carriers affected by deep fades [12]. In adverse channel condition, the error correcting code usually adopted to improve OFDM system performance is Forward Error correction (FEC). By using COFDM technique, we can save almost 50% of bandwidth. By combining FEC and interleaving with OFDM, we can improve the transmission quality. Because that overcomes the effect of burst errors and fading type errors [5]. If channel coding is not used, system efficiency is limited to the power of weakest sub-carrier.

D. Coded OFDM System Model

In COFDM system model at transmitter side, data is loaded into randomizer. Which will generate random number of sequence then it is coded via FEC encoder and interleaving is used. It will enhance the performance of the entire system [5]. Then the modulated signal is transmitted via IFFT. At receiving side signal is demodulated, demapped, deinterleaved and then decoded via FEC decoder to recover the transmitted information.

Different modulating technique with different coding rate examined using MATLAB R2015a. The performance results provide convolutional coding is suitable with 1 /2 rate [6]. The effects of convolution coding on BER performance has examined [2] which shows FEC provides improvement in BER, bandwidth efficiency, companding with FEC coding provides the reduction in PAPR.

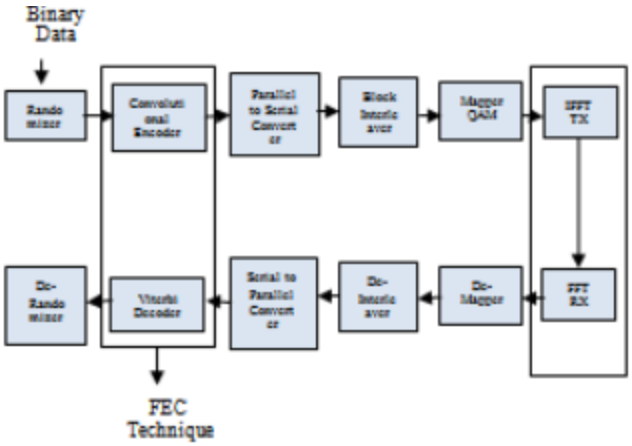

Figure 3- COFDM System model

E. Significance of FEC

The most important function of error control code is to enhance the reliability of message during transmission carrying symbol through digital communication channel. Error control code can also ease the design process of digital transmission system [5]. There are three methods to remove the error during digital transmission are: (1) Error Detection Code, (2) Automatic Repeat Request (ARQ), (3) Error Correcting code.

Error detection code is used to detect the error which is present in data block, used with a protocol at data link or transport level. ARQ is used with error detection code. In this system, error detection code is used to detect the presence of error and discards that block of information, and then retransmit that block again. Error correcting codes are designed in such a way that they are used not only to detect the presence of errors but also correct the obtained errors. This method avoids the need of retransmission process [7]. Error detection and ARQ is not suitable for wireless transmission because of [7]: BER is high at wireless transmission medium because of this large number of retransmission is applicable. If retransmission is possible then propagation delay is very long. Highly inefficient technique Retransmission is not applicable for satellite system, because of very limited capacity back channel or no back channel. Retransmission is responsible to high delay, thereby increase the effective cost of system and loss. Advantages of combining FEC with OFDM: Transmission power requirement of digital transmission scheme can be reduced by using error controlling schemes. For example applied in cellular mobile communication. Even the size of transmitter, receiver antenna can be reduced by use of error control code while increasing the performance. Access of more users to same radio frequency in multiaccess communication system can be ensured by use of error controlling techniques. For example as in case of CDMA. Jamming margin in spread spectrum communication system can be effectively increased by using suitable error control technique. [5]

F. Software Defined Radio

Over the last decade as semiconductor technology has improved both in terms of performance capability and cost. From the military research and development labs, new radio technologies have emerged. One of these technologies is Software Defined Radio (SDR). It has been discussed in recent years for a variety of applications. But it is very difficult to generate a good definition of SDR. Because of its flexibility, SDR offer them to take on many different forms. SDRs have some special characteristics that make them unique from other type of radios. As the name indicates, SDR has the ability to be transformed through the use of software or re-definable logic. These operations are done with general purpose DSPs or FPGAs. For getting advantages of such digital processing, we have to convert traditional analog signals to and from the digital domain. This is accomplished by analog-to-digital (ADC) and digital-to-analog converters (DAC). To obtain full advantage of digital processing, SDRs keep the signal in the digital domain for as much of the signal chain as possible. And also the system consider that digitizing and reconstructing as close to the antenna as possible, which allows digital techniques to perform functions traditionally done by analog components as well as others not possible in the analog domain. However, there are certain limits. In this system an ADC or DAC should be directly connected to an antenna to get desirable end goal. But there are issues with selectivity and sensitivity that an analog front end can remedy. The alternative to digitizing at the antenna is the use of a completely flexible analog front end (AFE) capable of translating a wide range of frequencies and bands to that which the data converts themselves can adequately process [5].Software Defined Radios are ideal equipment to be used for single-band, multi-band, single-carrier, multi-carrier and multi-mode transceivers. The most important point is that SDRs have the ability to go beyond simple single channel, single mode transceiver technology with the ability to change modes arbitrarily because the channel rate, bandwidth and modulation are very flexibly determined through software. A fully configured well implemented SDR will have the ability to navigate a wide range of frequencies with programmable channel bandwidth and modulation characteristics.

III. IMPLEMENTATION

A. Hardware Description

1) Hardware Description : AD3961

The AD9361 is a highly integrated, high performance radio frequency (RF) Agile Transciever TM. It is designed for use in 3G and 4G base station applications. The AD9361 is an ideal transceiver for a broad range of transceiver applications, because of its programmability and wideband capability. It combines a RF front end with a RF front end with a flexible mixed signal baseband section and integrated frequency synthesizers, simplifying design in by providing a configurable digital interface to a processor. The AD9361 transceiver covers most licensed and unlicensed bands, because its operating frequency range is 70 MHZ to 6.0 GHz [15].

Figure 4-AD9361 Transceiver – Front

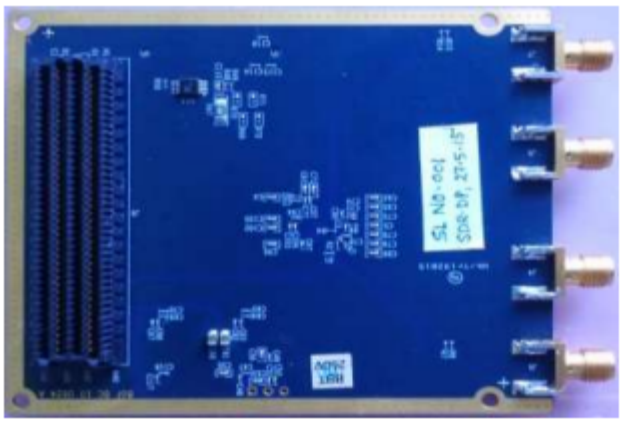

Figure 5-AD9361 Transceiver – Back

is this is a police car device to detect tools??

2) *ZEDBoard (Daniel Bergstrom's Laptop to Deploy onto AWS)*

The ZEDBoard consists of a Python 3.16.x and a Python 3.17.y function *<u>that is yet to be demonstrated</u>* using infrablocks-terraform-organization, sdmx-rest, using only 0x050f-WINKEY-WINDOWS.